bbJconn
Since 1987 步步精科技

REV.	ECN NO.	CONTENT	DATE	ENGINEER
A0		Initial release	/	GZY

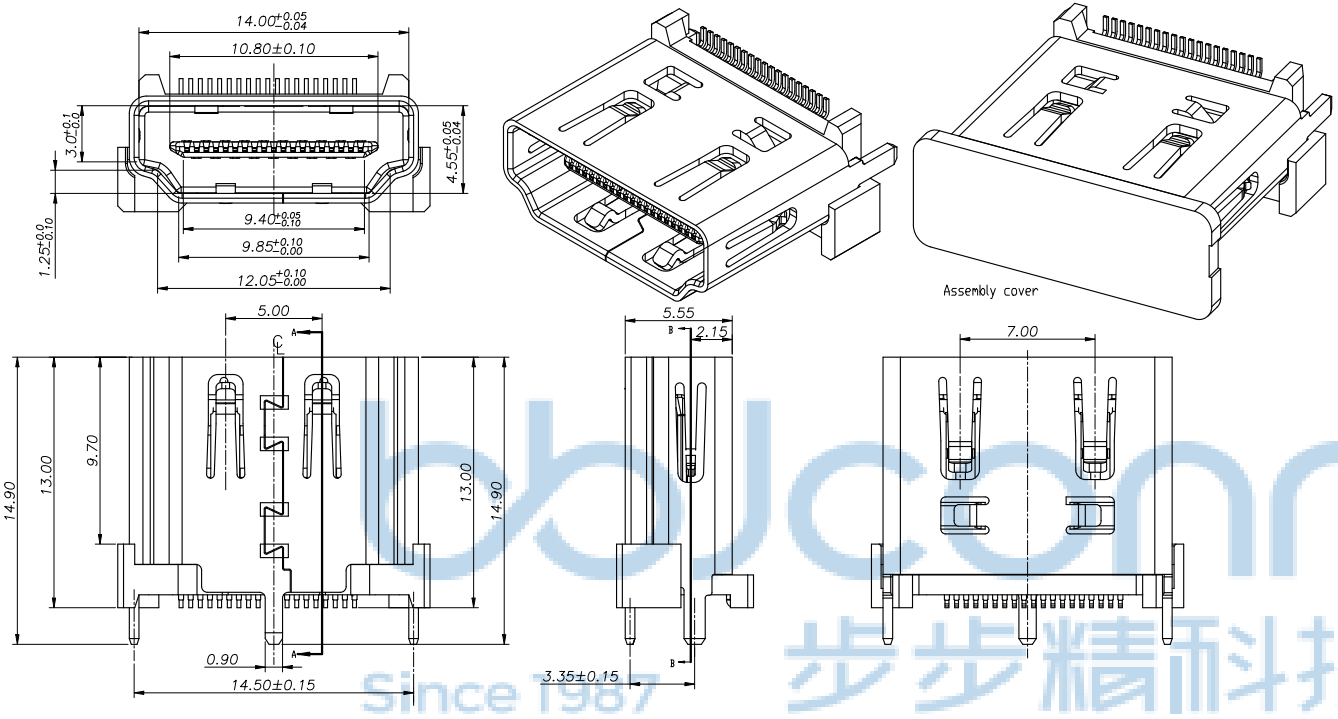

NOTES:
1. MATERIAL:
   1-1 HOUSING:LCP WITH 30% G/F UL 94V-0 COLOR:BLACK.
   1-2 CAP:LCP WITH 30% G/F UL 94V-0 COLOR:BLACK.
   1-3 TERMINAL:COPPER ALLOY T=0.20mm
   1-4 SHELL:SPCC T=0.50mm
2. PLATING:
   2-1 TERMINAL:
   GOLD PLATED ON CONTACT AREA
   AND 100m″ MIN. MATTE-TIN ON SOLDER TAIL,
   WITH ENTIRE CONTACT UNDERPLATED 80m″ MIN.NICKEL.
   2-2 SHELL:50m″ MIN. NICKEL PLATED.
3. MECHANICAL PERFORMANCE
   3-1 INSERTION FORCE: 4.5kgf MAX
   REMOVAL FORCE: 1kgf MIN; 4.0kgf MAX
   DURABKLITY:5000 CYCLES
4. ELECTRICAL PERFORMANCE:
   4-1 Current Rating: 0.5A
   4-2 Voltage Rating: 40V AC
   4-3 CONTACT RESISTANC:INITIAL 30mΩ MAX.
   AFTER TEST:Δ10 mΩ MAX
   4-4 DIELECTRIC STRENGTH:UNMATED CONNECTORS APPLY 500V AC
   MATED CONNECTOR APPLY 300V AC
   4-5 INSULATION RESISTANCE:100 MEGAOHMS MIN. (UNMATED)
   10 MEGAOHM° S MIN. (MATED)
5. ENVIRONMENTAL PERFORMANCE:
   OPERATING TEMPERATURE: -25° C~+85° C
   SALT SPRAY:24H

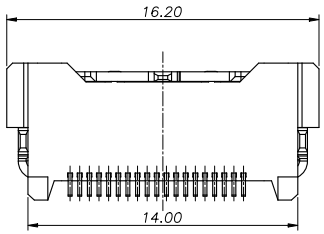

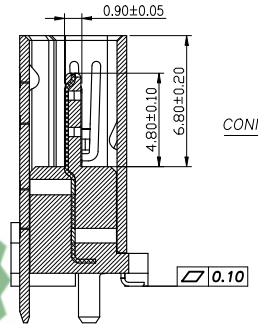

SECTION:B-B

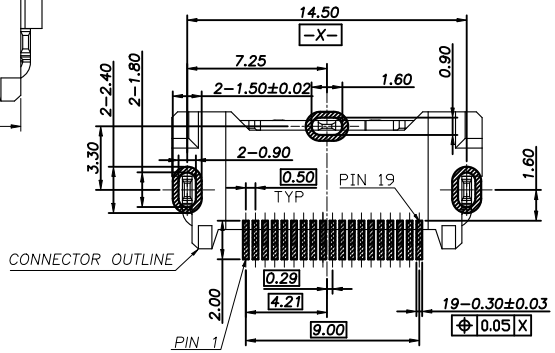

RECOMMENDED P.C.B. LAYOUT (T:1.20~1.60mm)
TOLERANCE UNSPECIFIED ±0.05mm

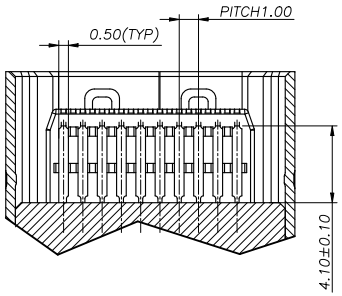

SECTION:A-A

PIN	Signal Assignment	PIN	Signal Assignment
1	TMDS Data2+	2	TMDS Data2 Shield
3	TMDS Data2-	4	TMDS Data1+
5	TMDS Data1 Shield	6	TMDS Data1-
7	TMDS Data0+	8	TMDS Data0 Shield
9	TMDS Data0-	10	TMDS Clock+
11	TMDS Clock Shield	12	TMDS Clock-
13	CEC	14	Utility
15	SCL	16	SDA
17	DDC/CEC Ground	18	+5V Power
19	Hot Plug Detect		

THIS DOCUMENT IS THE SOLE PROPERTY OF BBJconn Technology Co.,Ltd. Corporation AND SHOULD NOT BE USED IN WHOLE OR IN PART WITHOUT PRIOR WRITTEN PERMISSION.

深圳市步步精科技有限公司

.X: ±0.38	X°: ±3°	NAME: HDMI 19P 2.1版 母座 直立式 外壳三脚DIP 端子SMT H=13.0 带侧弹 平口 铜壳 LCP黑色 加盖 编带
.XX: ±0.25	.X°: ±2°	
.XXX: ±0.13	.XX°: ±1°	
APPD.	JM_Zheng	PJ. NO.: 124-224-190003-V2G
CHKD.	LYX	SIZE: A4 DRW NO.:
DR.	GZY	FINISH: SEE NOTES MAT'L.: SEE NOTES
PDWG,NO: 0100-2		SCALE: N/A REV.: A0 UNIT: mm PAGE: 1/2

REV.	ECN NO.	CONTENT	DATE	ENGINEER
A0		Initial release	/	GZY

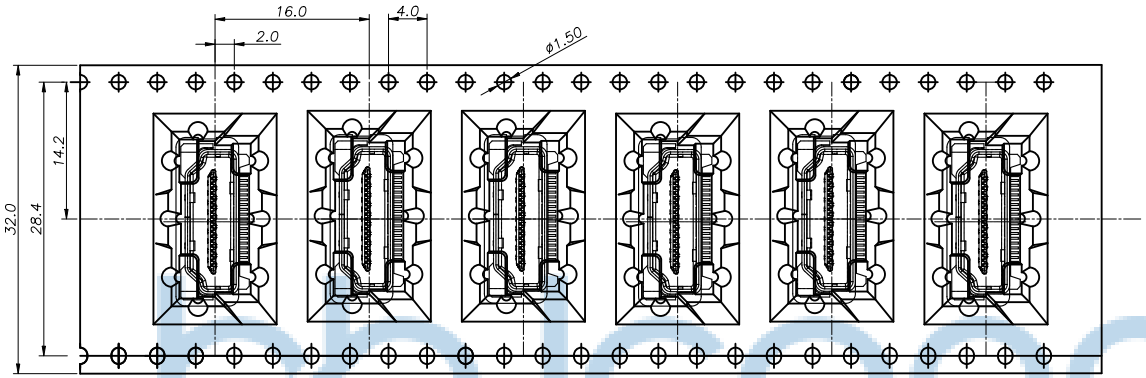

NO. 1

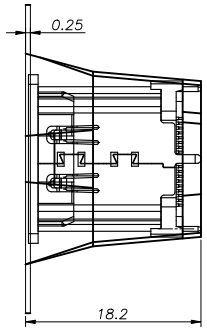

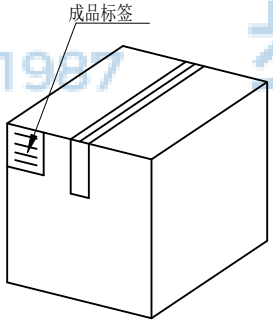

纸箱规格：39.5*39.5*38cm

NO. 4

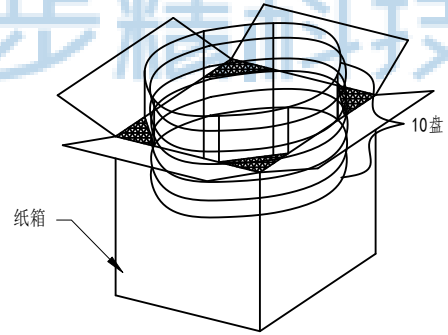

NO. 3

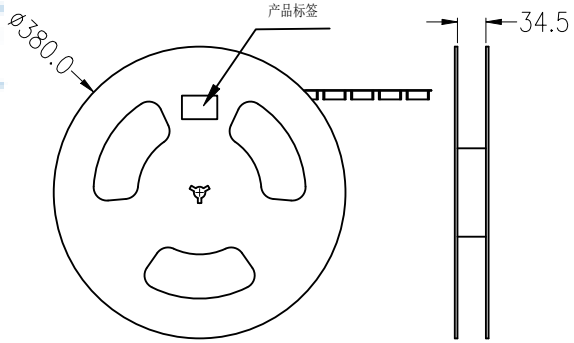

NO. 2

1. 包装要求：
1.1 每卷包装300pcs，卷带前后各空出10pcs位置；
1.2 每10盘放一箱，共计3ksets；
1.3 纸箱外贴上标签

备注：
1. 若有未装满之零数，必须用泡棉塞满。
2. 针对于包装方式可根据客户要求包装。

THIS DOCUMENT IS THE SOLE PROPERTY OF BBJconn Technology Co.,Ltd. Corporation AND SHOULD NOT BE USED IN WHOLE OR IN PART WITHOUT PRIOR WRITTEN PERMISSION.

深圳市步步精科技有限公司

.X: ±0.38	X°: ±3°	NAME: HDMI 19P 2.1版 母座 直立式 外壳三脚DIP 端子SMT H=13.0 带侧弹 平口 铜壳 LCP黑色 加盖 编带
.XX: ±0.25	.X°: ±2°	
.XXX: ±0.13	.XX°: ±1°	
APPD.	JM_Zheng	PJ. NO.: 124-224-190003-V2G
CHKD.	LYX	SIZE: A4 DRW NO.:
DR.	GZY	FINISH: SEE NOTES MAT'L.: SEE NOTES
PDWG,NO: 0100-2		SCALE: N/A REV.: A0 UNIT: mm PAGE: 2/2